THE SHARPER IMAGE®

Oxygenics® Body Spa® Self-Pressurizing Hand-Held Showerhead

EL002 Instructions

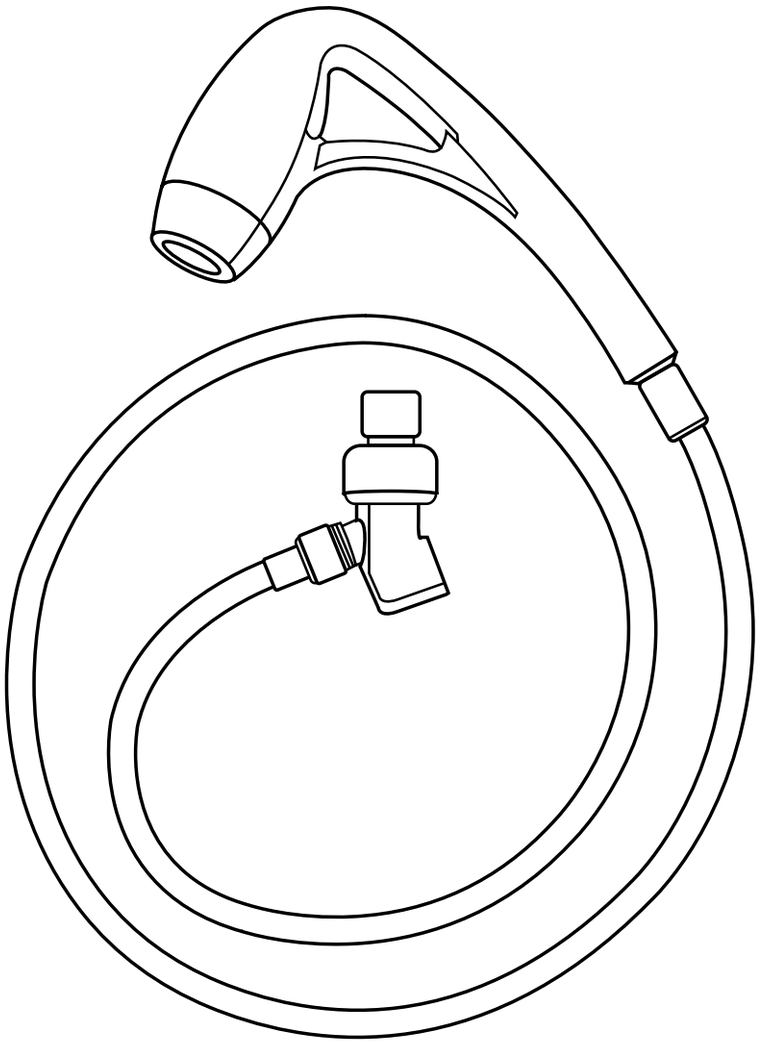

Read and save these instructions.

Dear Sharper Image Customer,

Thank you for your purchase of a Sharper Image product. We appreciate your business very much.

Please accept my personal assurance of your complete satisfaction with this product's quality and performance. We offer generous return privileges and excellent warranties on all our products.

For more than 25 years, The Sharper Image has shared the fun of discovering innovative products that make life better and more enjoyable. We've been in business a long time because we are an exciting place to shop and — just as importantly — we strive to deliver great customer service that exceeds your expectations.

Enjoy your purchase!

Respectfully,

Richard

Richard Thalheimer
Founder, Chairman and Chief Executive Officer

Call 1-800-344-4444 for 24-7 ordering and customer service, or go to **www.sharperimage.com**, *our complete online store.*

Installation Instructions

1. Remove the old showerhead. Cover the shower arm with a piece of cloth and hold vice-grip pliers securely to the shower arm, approximately one inch above the showerhead attachment nut. Using a crescent wrench, securely grip the showerhead attachment nut. Turn the crescent wrench slowly in a counterclockwise direction, maintaining a firm grip. Remove the showerhead from the shower arm. See Figure 1.

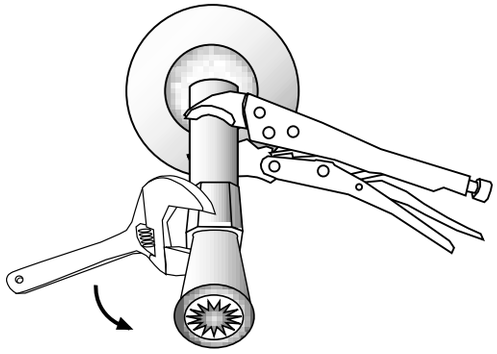

Figure 1

2. Thoroughly clean the threaded area of the existing shower arm using a wire brush or steel wool. See Figure 2.

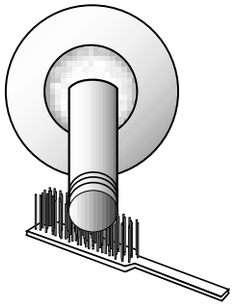

Figure 2

Installation Instructions

3. Turn on the water and let it run for 5 to 10 seconds. The water pressure flushes out the remaining residue in the pipe. See Figure 3.

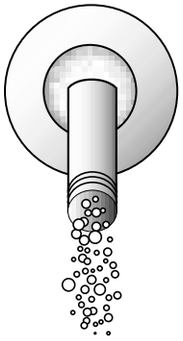

Figure 3

4. Wrap Teflon® tape 1½ to 3 turns clockwise around the threaded tip of the shower arm. See Figure 4.

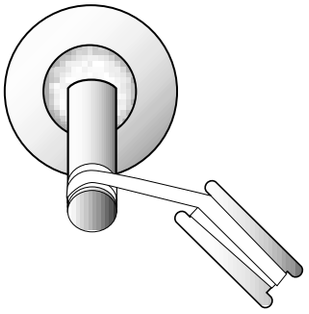

Figure 4

Installation Instructions

5. Screw the hand-held holder onto the shower arm. Ensure large washer A is securely placed on the end holder connecting to pipe. Place small washer B on hose end D and screw onto the shower arm. See Figure 5.

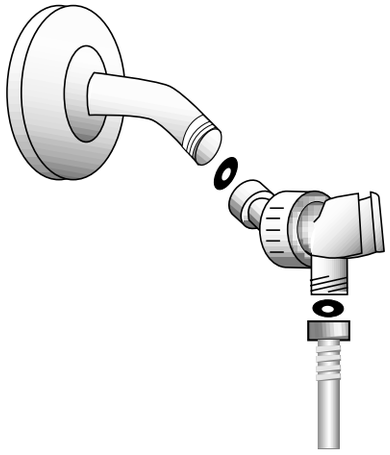

Figure 5

Washer A

Washer B

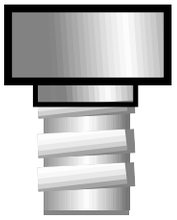

Hose End D
Small Coupling End

Installation Instructions

6. Place large washer C in cone-shaped hose end E and tighten hand-held unit onto hose. See Figure 6.

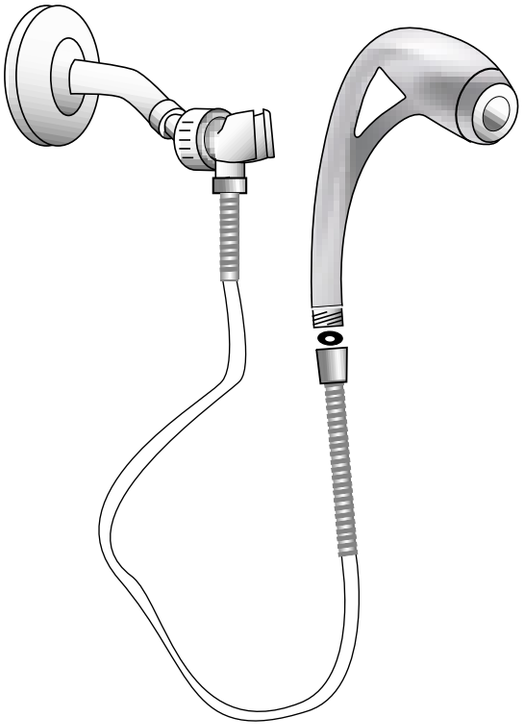

Figure 6

Washer C

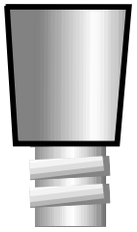

Hose End E
Large Cone-Shaped End

Installation Instructions

7. Insert hand-held shower fixture into holder. See Figure 7.

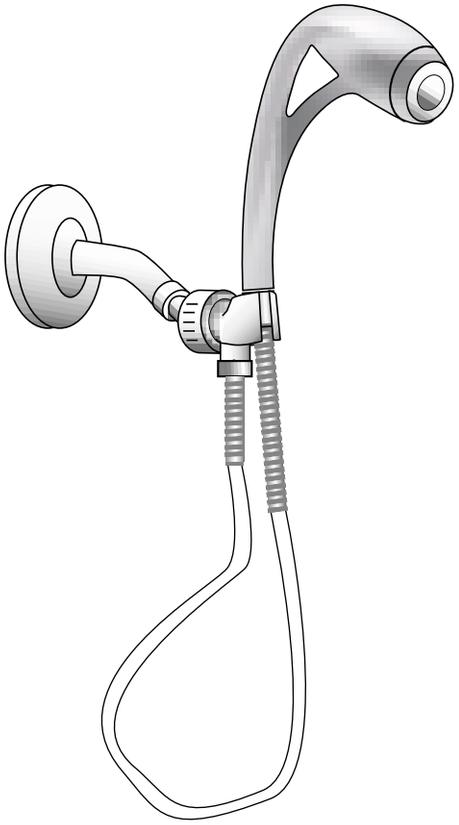

Figure 7

WARRANTY

What Is Covered

This warranty covers any defects in materials or workmanship, with the exceptions stated below.

How Long Coverage Lasts

This warranty runs for 90 days from the date of original purchase.

What Is Not Covered

This warranty does not cover damage caused by misuse or use other than as intended and described in the product instruction manual, or loss or damage to batteries or removable parts.

What The Sharper Image Will Do

The Sharper Image will repair any defects in materials or workmanship. In the event repair is not possible, The Sharper Image will either replace this product with one of similar features and price, or refund the full purchase price of the product, whichever you prefer.

How to Obtain Service

Return the product and receipt, along with a brief explanation of the problem, to:

T.S.I. - Returns Department
2901-A West 60th Street
Little Rock, AR 72209

If you have questions please feel free to contact our customer service representatives at 1-800-344-5555 or by email at care@sharperimage.com.

This warranty gives you specific legal rights, and you may have other legal rights that vary from state to state.

Copyright 2003

Sharper Image Corporation
650 Davis St., San Francisco, CA 94111
(415) 445-6000

Shop online: **www.sharperimage.com**

Due to continuing improvements, actual product may differ slightly from the product described herein.
V1 08/03